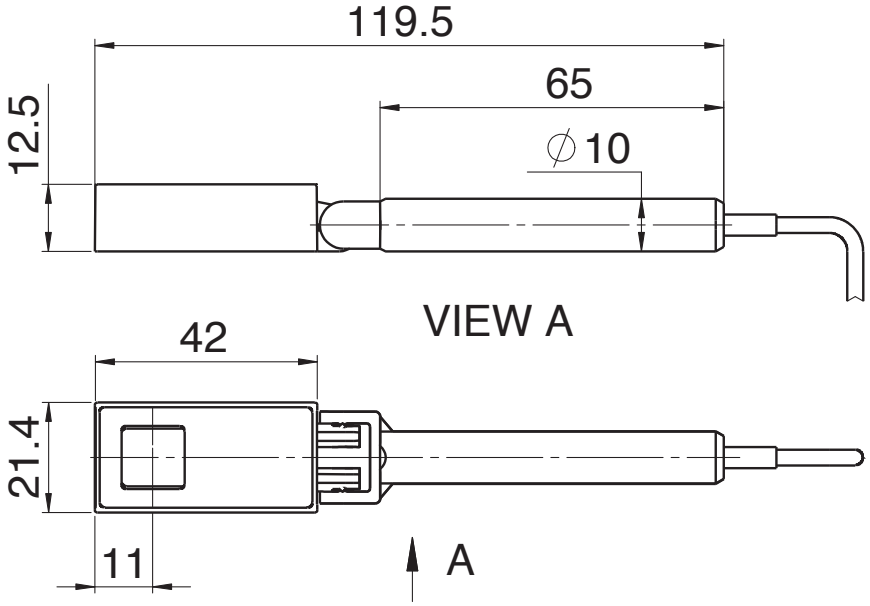

Front View

PD300-3W with filter installed

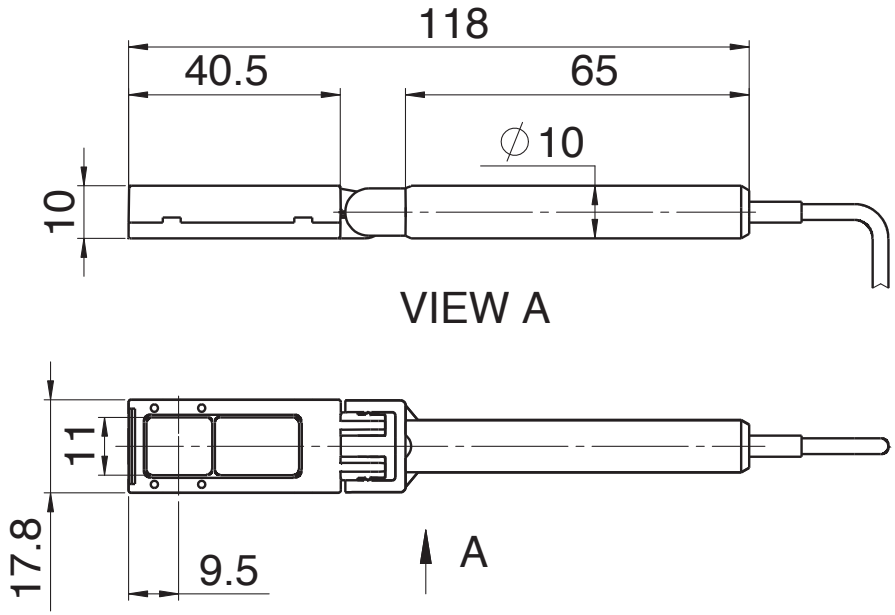

Front View

PD300-3W with filter off

Ophir®